Strom Plumbing

BY

Sign of the Crab

Ph: (916) 638-2722 / Fax: (916) 638-2725

Installation Information

Item #P1083-28

Faucet and Freestanding Supply Lines Kit, 28” high and 7” centers

Warranted only when installed by a qualified licensed plumber.

1. **Note the rough-in centers for these supply lines are determined by the centers of the faucet they are being installed on. This faucet has 7” centers and a 5 ½” spout drop from the center of the faucet body to the bottom of the spout. Check your local code requirements for the spout height requirements.**
2. **Dry assemble parts as shown to test height and position of valves for your installation. Please assure that the union connection on the shut off valve should be towards the floor.**
3. **Rough-in ½” IPS Female connection at the floor about ½” above the finished floor. First determine how far from the tub the rough-in should be according to the final placement needed for the faucet.**

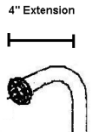

4. **After all positions and height has been determined, begin assembly from the floor using a clear two part epoxy at all the threaded connections. This will insure a waterproof seal with a clean and quick permanent installation. Use a strap wrench or protected/smooth jaw wrench to protect the finished surface. Duct tape may also be wrapped around parts for further protection of scratches during installation.**
5. **Screw the bottom nipple into the ½” IPS Female connection, epoxy and tighten. Slide the escutcheon over the nipple.**
6. **Epoxy and tighten the valve onto the top of the nipple.**
7. **Epoxy and tighten the upper pipe into the top of the valve. Slide the faucet connection nut onto the upper pipe with the threads facing toward the faucet. Epoxy and tighten the union coupling onto the end of the upper pipe. Tighten faucet connection nut and washer to faucet.**
8. **Measure the length of the wall support needed. The non-threaded end may be cut to fit your installation. Attach the wall escutcheon to the wall. Insert rod into escutcheon and tighten set screw. Thread on the c-clamp to the rod and then clamp to riser tube.**

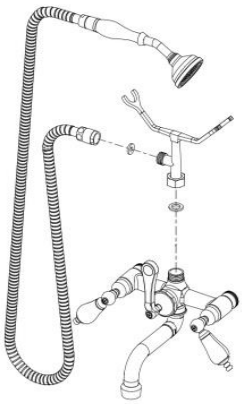

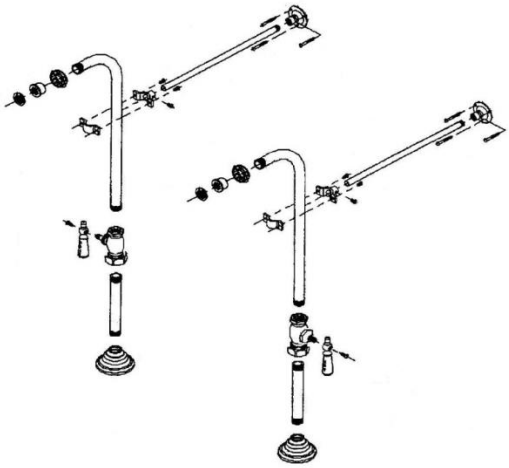

Parts Included:
(1) Faucet with 7” centers
(1) Handheld Shower and Hose
(1) Inlet Bracket for Handheld
(2) Escutcheons
(2) 10” Bottom Nipples
(2) Shut Off Valves w/handles
(2) 15” Top 90 Degree Tubes
(2) Faucet Connector Nuts
(2) Union Couplings
(2) Screen Washers
(2) Wall Escutcheons
(2) 12” Support Braces
(2) C-Clamps
(1) Vacuum Breaker