Strom Plumbing
BY
Sign of the Crab

Ph: (916) 638-2722 / Fax: (916) 638-2725

Tub Specifications – Cast Iron Dual on Pedestal

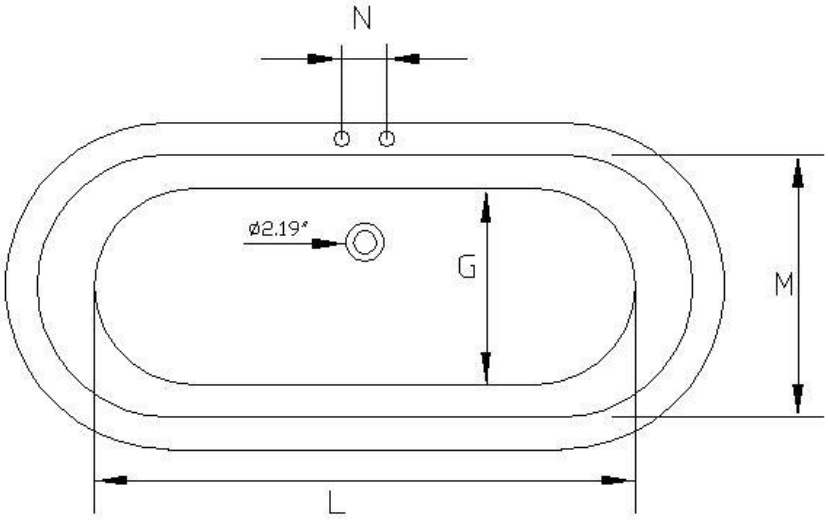

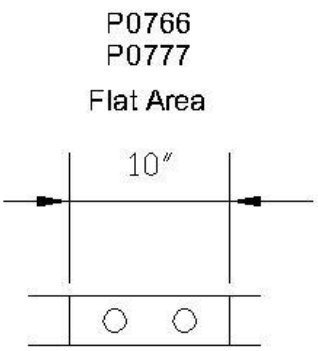

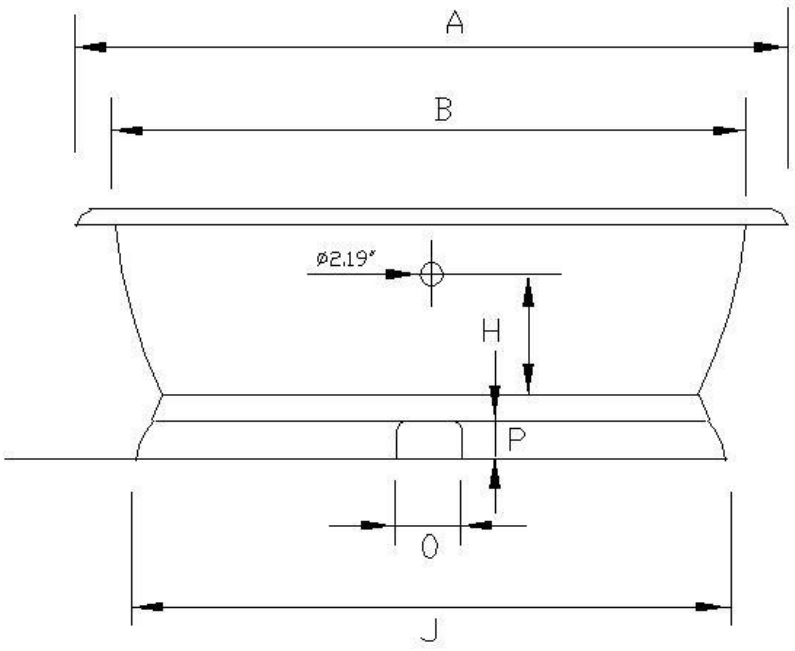

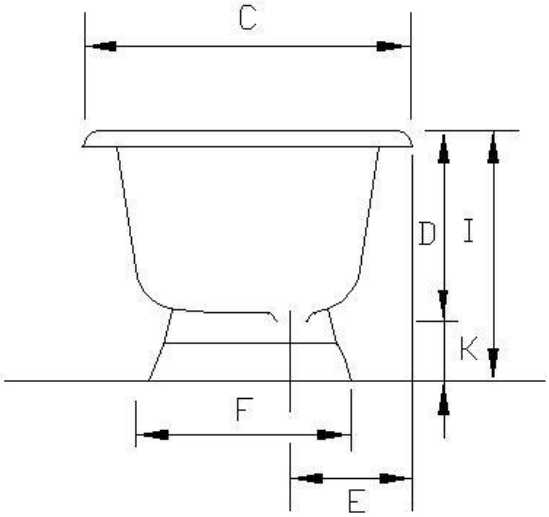

	A	B	C	D	E	F	G	H	I	J	K	L	M	N	O	P	VOL	WGHT
P0777	61.5"	54"	30.5"	18"	11"	22"	17"	17.25"	24.5"	45.5"	7.25"	41.0"	24.5"	7"	5.5"	5.0"	45 GAL	462 LBS
P0778	61.5"	54"	30.5"	18"	11"	22"	17"	17.25"	24.5"	45.5"	7.25"	41.0"	24.5"		5.5"	5.0"	45 GAL	462 LBS
P0766	66.5"	60"	30.5"	18"	11"	22"	17"	17.25"	24"	51.5"	7.25"	45.0"	24.5"	7"	5.5"	5.0"	50 GAL	475 LBS
P0769	66.5"	60"	30.5"	18"	11"	22"	17"	17.25"	24"	51.5"	7.25"	45.0"	24.5"		5.5"	5.0"	50 GAL	466 LBS

SIGN OF THE CRAB, LLC